Heat Exchanger	Fans Used	A (inches)	B (inches)	C (inches)	D (inches)	E (inches)	F (inches)	G (inches)	H (inches)	I (inches)	J (inches)	K (inches)	L (inches)
720	(1) x 119mm square	5.78	1.84	4.96	3.75	0.40	1.20	7.94	1.57	5.80	0.57	0.40	2.50
721	(2) x 119mm square	5.78	1.84	4.96	3.75	0.40	1.20	12.70	1.63	10.50	0.57	0.75	4.50
722	(1) x 172mm round	9.00	2.60	8.00	0.38	0.60/1.25	7.68	12.22	2.36	9.50	0.36	0.72	4.03
723	(2) x 172mm round	9.00	2.50	8.00	0.38	0.50/1.15	7.68	19.97	2.36	17.50	0.11	1.00	7.75
724	(1) x 254mm round	12.00	2.12	11.00	1.13	0.61/1.26	5.44	13.65	1.94	11.50	0.21	0.72	5.03
725	(2) x 254mm round	12.00	2.12	11.00	1.13	0.61/1.26	5.44	23.42	1.55	21.56	0.31	1.03	6.50
726	(6) x 172mm x 150mm	14.00	2.63	13.00	11.57	0.94	1.21	25.47	2.72	21.85	0.90	1.92	6.00
727	(4) x 254mm round	22.87	2.63	21.87	1.13	0.49/1.94	0.95	24.33	1.10	20.25	NA	1.50	6.50

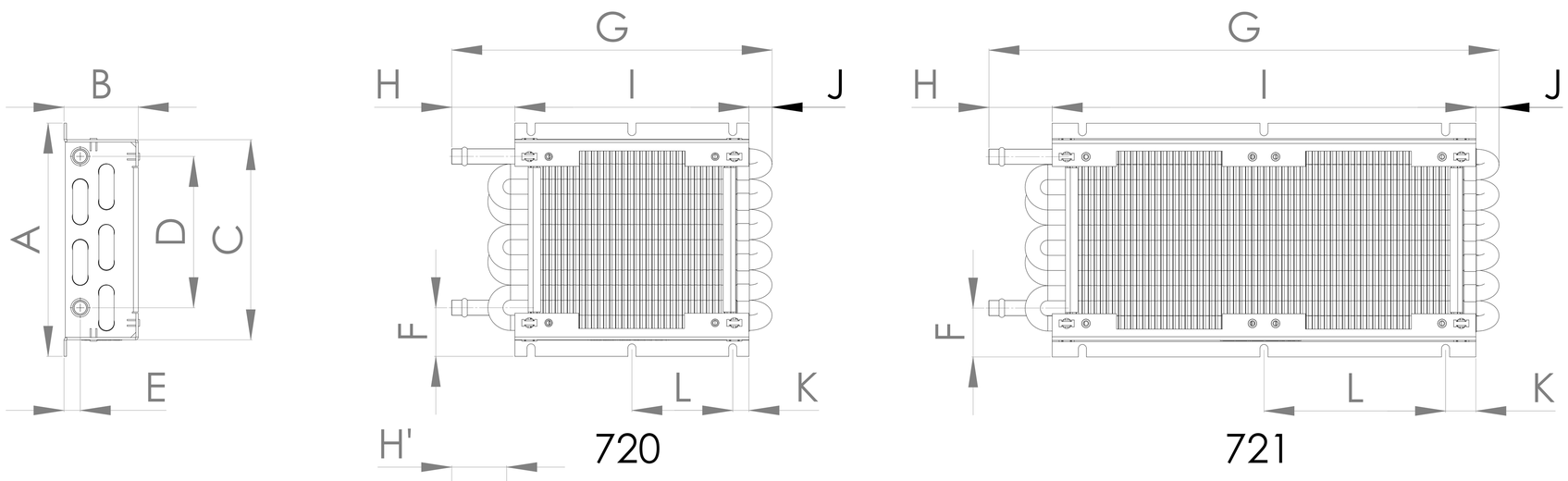

720

721

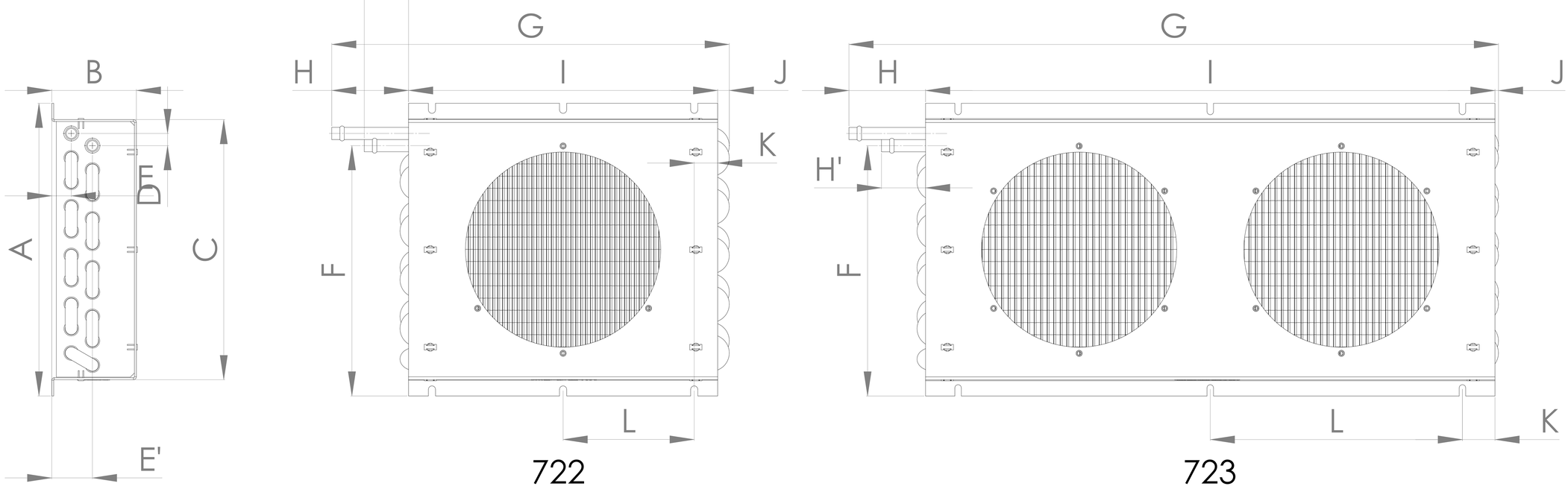

722

723

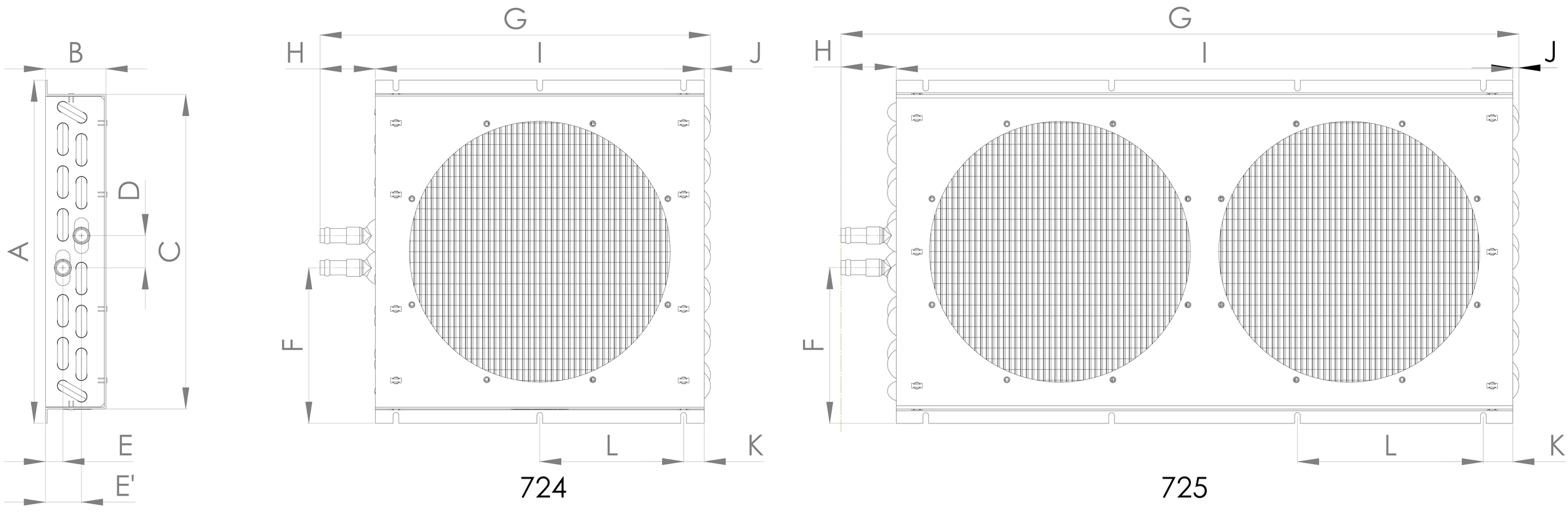

724

725

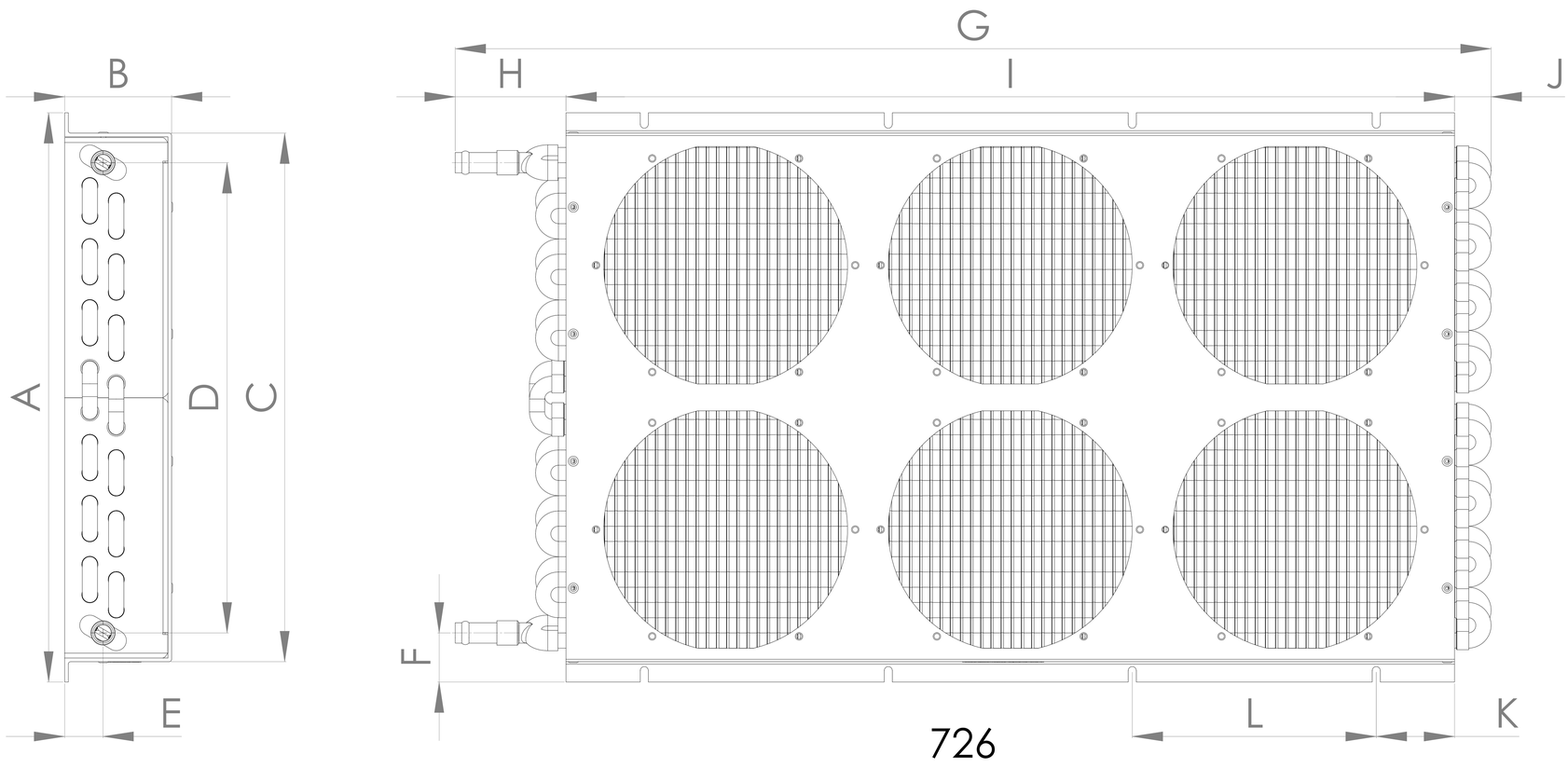

726

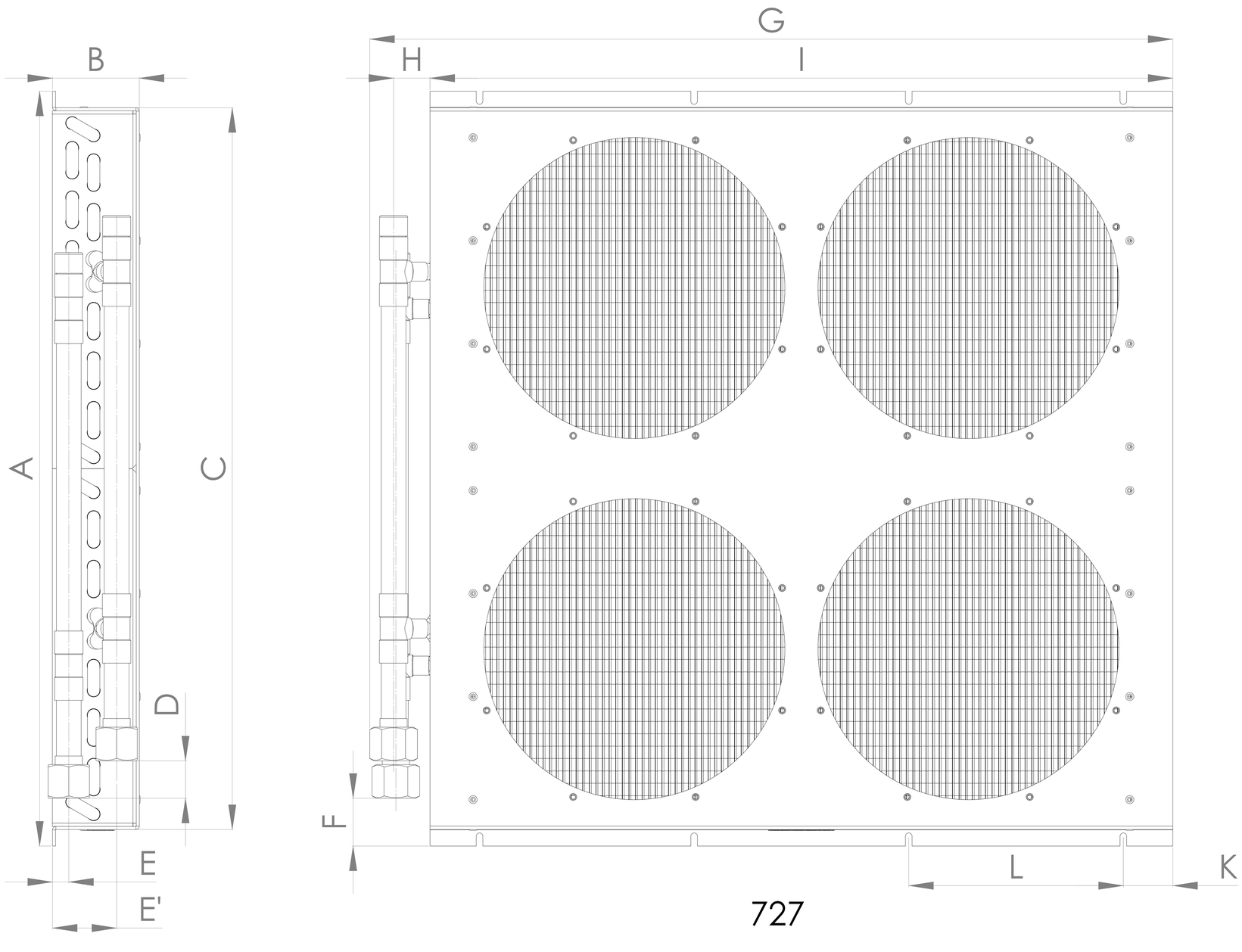

727